REVISIONS						
ZONE	LTR.	DESCRIPTION	ECN NO.	DATE	BY	APPR'D
	A	RELEASED FOR PRODUCTION	72122	28MAY09	RMB	BLM
4A	B	B1 REPLACED "HOT STAMP INFO" WITH "MARKING INFO"	73288	1FEB11	SNB	BLM

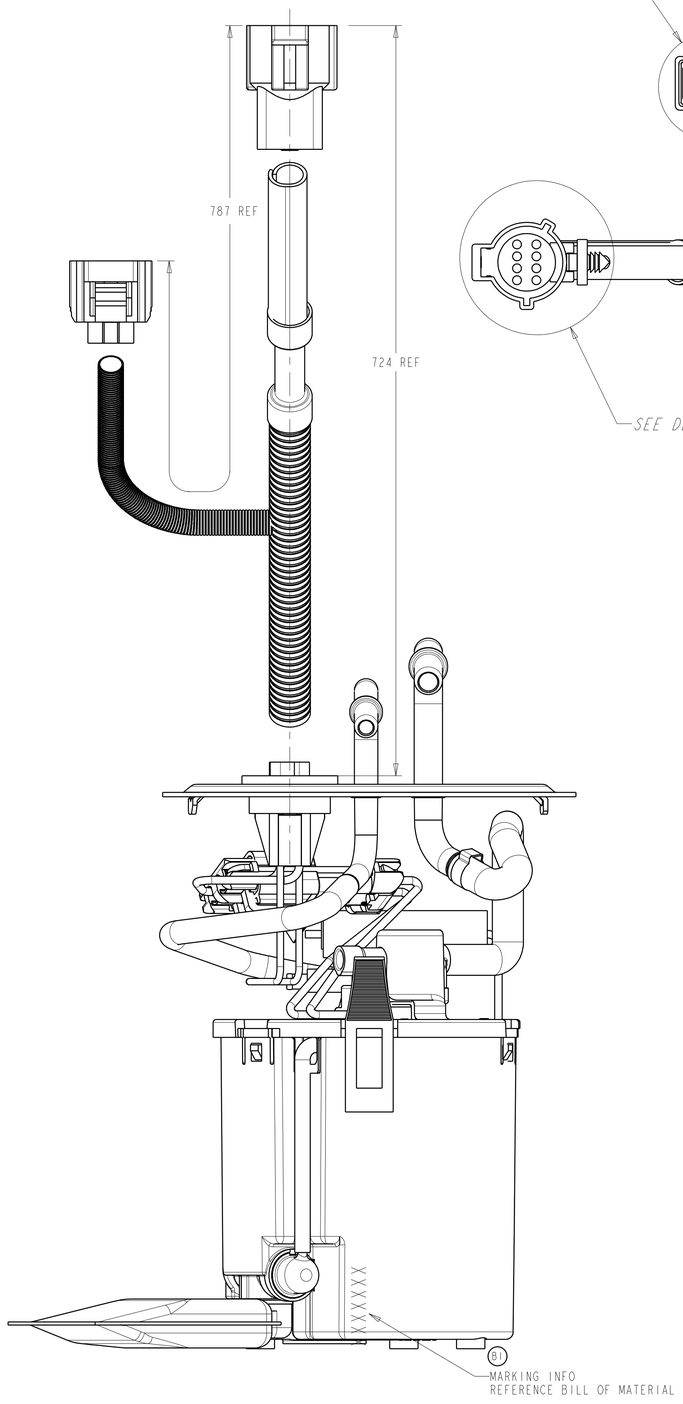

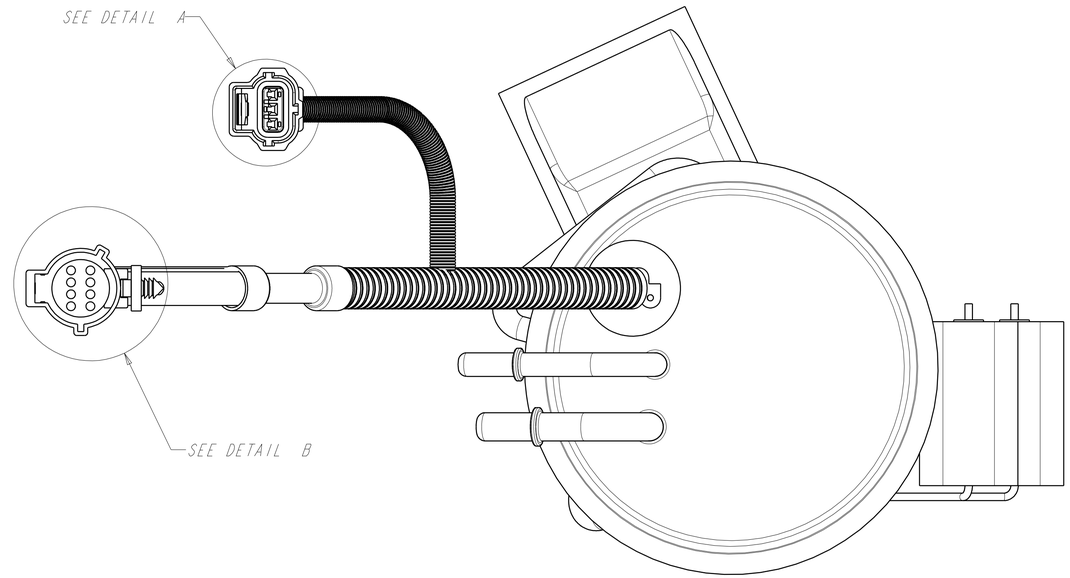

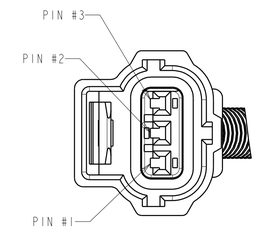

CONNECTOR
OBD2 SENSOR
PINOUT DETAIL A
SCALE 2:1

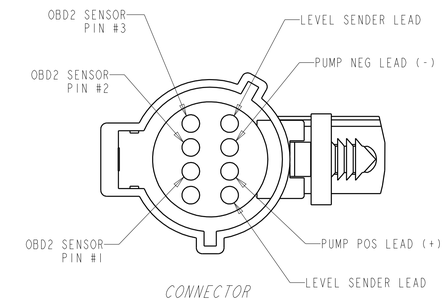

CONNECTOR
MODULE MAIN
PINOUT DETAIL B
SCALE 2:1

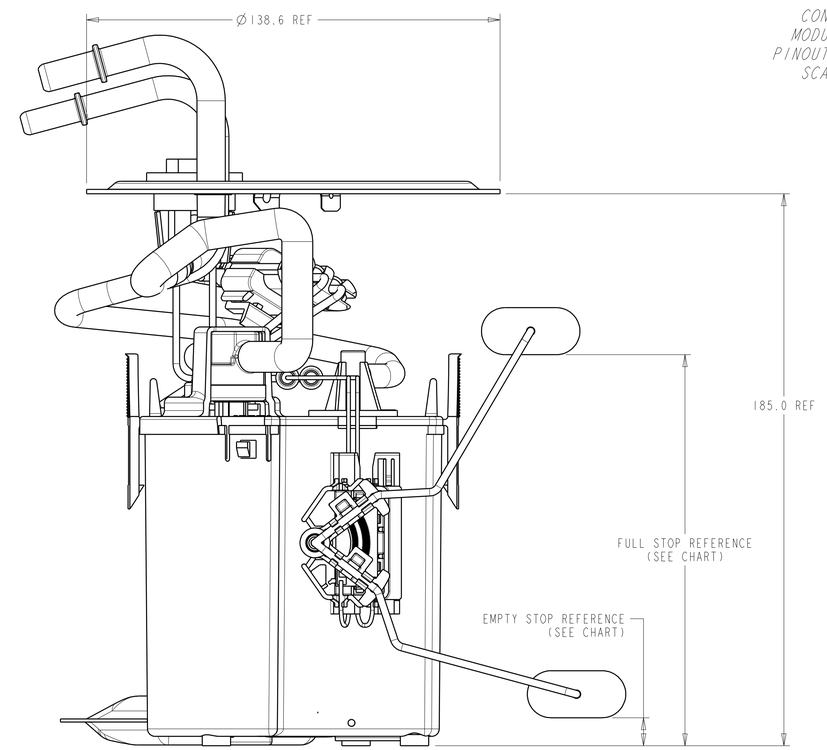

FLOAT POSITION	RESISTANCE (OHMS)
FULL STOP (131.7)	136.0±3.0
EMPTY STOP (10.0)	6.0±1.0

NOTE:

1. SPECIAL CUSTOMER PACKAGING REQUIREMENTS MAY CALL FOR THE ADDITION OF SPECIFIC LABELS NOT SHOWN ON THIS DRAWING.
2. SHOWN WIRE ROUTING MAY DIFFER FROM FINISHED PRODUCT.

TI Group CLAIMS PROPRIETARY RIGHTS IN THE SUBJECT MATTER SHOWN AND DESCRIBED ON THIS DRAWING. THE DRAWING IS FURNISHED FOR REFERENCE PURPOSES ONLY AND ON THE EXPRESS UNDERSTANDING THAT IT WILL BE HELD IN STRICT CONFIDENCE AND NEITHER IT NOR ANY REPRODUCTION THEREOF WILL BE DISCLOSED TO OTHERS OR USED FOR THE PURPOSE OF MANUFACTURE OR PROCUREMENT FROM WHOM IT CONCERNS, ARTICLE OR PARTS SHOWN THEREON WITHOUT EXPRESS AND WRITTEN CONSENT. NO RIGHT TO USE OR REPRODUCE THIS DRAWING IS GIVEN OR SHALL BE ASSUMED BY PROVISIONS OF THIS DRAWING TO RECIPIENT.

◪ DENOTES ASSEMBLY/TEST/PROCESS
Ⓢ DENOTES SAFETY CHARACTERISTIC
◇ DENOTES SIGNIFICANT CHARACTERISTIC

INTERNAL USE ONLY DISTRIBUTION CODE
AF

REF. FM0002213

DO NOT SCALE PRINT

DIMENSIONS AND TOLERANCES PER ANSI/ASME Y14.5M - 1994

PRO-E

PROJECTION

D SIZE

TOLERANCE UNLESS OTHERWISE SPECIFIED:
X ±0.76
.X ±0.25
.XX ±0.13
ANGLE ±1/2°
CONCEN. 0.08

MATERIAL

FINISH

TI Automotive
AFTERMARKET DIVISION
630 COLUMBIA STREET
CARO, MI 48723

SCALE: 1:1
DATE: 28MAY09
DRN. BY: R.BRUBAKER
CHK'D BY:
APPR'D BY: B.MIDDLETON

TITLE
FUEL MODULE OUTLINE

DRAWING NO. TU247
REV. B